BMP: BMP Inspection and Maintenance

BMPIM

APPLICATIONS

☐ Manufacturing
☒ Material Handling
☒ Vehicle Maintenance
☐ Construction
☐ Commercial Activities
☐ Roadways
☒ Waste Containment
☒ Housekeeping Practices

DESCRIPTION:

Inspect and maintain all structural BMP's (both existing and new) on a routine basis to remove pollutants from entering storm drain inlets. This includes the establishment of a schedule for inspections and maintenance.

APPROACH:

Regular maintenance of all structural BMP's is necessary to ensure their proper functionality.

- Annual inspections.
- Prioritize maintenance to clean, maintain, and repair or replace structures in areas beginning with the highest pollutant loading.
- Clean structural BMP's in high pollutant areas just before the wet season to remove sediments and debris accumulated during the summer and fall.
- Keep accurate logs of what structures were maintained and when they were maintained.
- Record the amount of waste collected.

LIMITATIONS:

- Cost
- Availability of trained staff

SALT LAKE COUNTY

TARGETED POLLUTANTS

■ Sediment
■ Nutrients
☐ Heavy Metals
■ Toxic Materials
☐ Oxygen Demanding Substances
■ Oil & Grease
■ Floatable Materials
☐ Bacteria & Viruses

■ High Impact
☒ Medium Impact
☐ Low or Unknown Impact

IMPLEMENTATION REQUIREMENTS

■ Capital Costs
■ O&M Costs

■ High ☒ Medium ☐ Low

BMP: Contractor Certification &Inspector Training

CCIT

Municipalities can establish training programs to educate contractors about erosion and sediment control practices

Construction reviewers periodically inspect construction sites to ensure that contractors have installed and maintained their erosion and sediment controls properly (Source: University of Connecticut Cooperative Extension System, 2000)

APPLICATIONS

- ☐ Manufacturing
- ☒ Material Handling
- ☐ Vehicle Maintenance
- ☒ Construction
- ☐ Commercial Activities
- ☐ Roadways
- ☒ Waste Containment
- ☐ Housekeeping Practices

DESCRIPTION:

One of the most important factors determining whether or not erosion and sediment controls will be properly installed and maintained on a construction site is the knowledge and experience of the contractor. Many communities require certification for key on-site employees who are responsible for implementing the ESC plan. Several states have contractor certification programs. The State of Delaware requires that at least one person on any construction project be formally certified. The Delaware program requires certification for any foreman or superintendent who is in charge of onsite clearing and land-disturbing activities for sediment and runoff control associated with a construction project.

APPROACH:

- Training and certification will help to ensure that the plans are properly implemented and that best management practices are properly installed and maintained.
- Inspector training programs are appropriate for municipalities with limited funding and resources for ESC program implementation.
- Contractor certification can be accomplished through municipally sponsored training courses, or more informally, municipalities can hold mandatory pre-construction or pre-wintering meetings and conduct regular and final inspection visits to transfer information to contractors (Brown and Caraco, 1997).
- To implement an inspector training program, the governing agency would need to establish a certification course with periodic recertification, review reports submitted by private inspectors, conduct spot checks for accuracy, and institute fines or other penalties for noncompliance.
- Curb systems should be maintained through curb repair (patching and replacement).
- To minimize the amount of spilled material tracked outside of the area by personnel, grade within the curbing to direct the spilled materials to a down-slope side of the curbing, thus keeping the spilled materials away from personnel and equipment. Grading will also facilitate clean-up.

LIMITATIONS:

- Contractor certification and inspector training programs require a substantial amount of effort on the part of the municipality or regulatory agency.
- They need to develop curricula for training courses, dedicate staff to teach courses, and maintain a report review and site inspection staff to ensure that both contractors and inspectors are fulfilling their obligations and complying with the ESC program.

TARGETED POLLUTANTS

- ■ Sediment
- ■ Nutrients
- ☐ Heavy Metals
- ■ Toxic Materials
- ☐ Oxygen Demanding Substances
- ■ Oil & Grease
- ■ Floatable Materials
- ☐ Bacteria & Viruses

- ■ High Impact
- ☒ Medium Impact
- ☐ Low or Unknown Impact

IMPLEMENTATION REQUIREMENTS

- ■ Capital Costs
- ■ O&M Costs
- ☒ Maintenance
- ☐ Training

■ High ☒ Medium ☐ Low

BMP: Dust Controls

DC

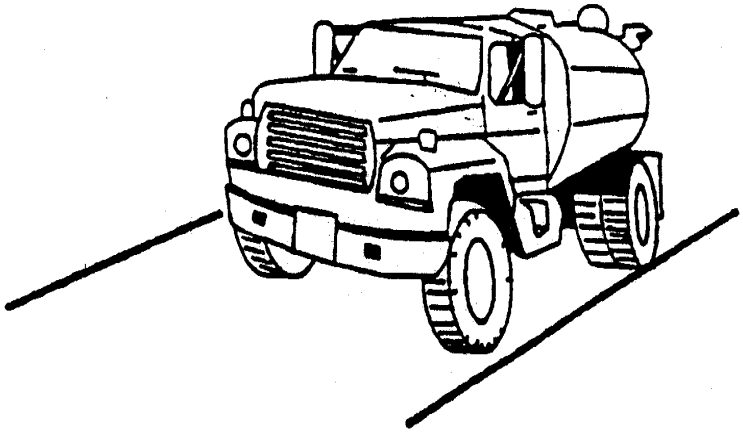

OBJECTIVES

☒ Housekeeping Practices
☐ Contain Waste
☒ Minimize Disturbed Areas
☒ Stabilize Disturbed Areas
☐ Protect Slopes/Channels
☐ Control Site Perimeter
☐ Control Internal Erosion

DESCRIPTION:
Dust control measures are used to stabilize soil from wind erosion, and reduce dust by construction activities.

APPLICATION:
Dust control is useful in any process area, loading and unloading area, material handling areas, and transfer areas where dust is generated. Street sweeping is limited to areas that are paved.

INSTALLATION/APPLICATION CRITERIA:
- Mechanical dust collection systems are designed according to the size of dust particles and the amount of air to be processed. Manufacturers' recommendations should be followed for installation (as well as the design of the equipment).
- Two kinds of street weepers are common: brush and vacuum. Vacuum sweepers are more efficient and work best when the area is dry.
- Mechanical equipment should be operated according to the manufacturers' recommendations and should be inspected regularly.

LIMITATIONS:
- Is generally more expensive than manual systems.
- May be impossible to maintain by plant personnel (the more elaborate equipment).
- Is labor and equipment intensive and may not be effective for all pollutants (street sweepers).

MAINTENANCE:
If water sprayers are used, dust-contaminated waters should be collected and taken for treatment. Areas will probably need to be resprayed to keep dust from spreading.

TARGETED POLLUTANTS

■ Sediment
☐ Nutrients
☐ Toxic Materials
☐ Oil & Grease
☐ Floatable Materials
☐ Other Waste

■ High Impact
☒ Medium Impact
☐ Low or Unknown Impact

IMPLEMENTATION REQUIREMENTS

☒ Capital Costs
☐ O&M Costs
☒ Maintenance
☒ Training

■ High ☒ Medium ☐ Low

BMP: Erosion Control Plan

ECP

Diversion dikes can be used to contain storm water onsite

APPLICATIONS

- ☐ Manufacturing
- ☐ Material Handling
- ☐ Vehicle Maintenance
- ■ Construction
- ☐ Commercial Activities
- ☒ Roadways
- ☐ Waste Containment
- ☐ Housekeeping Practices

DESCRIPTION:

Erosion control measures must be taken during a construction project. An Erosion Control Plan will be submitted and approved before work can begin on the project. An Erosion Control Plan describes what erosion control BMPs will be implemented, when and where, during the project.

APPROACH:

- Create a list of possible erosion control BMPs that could be implemented in any given project.
- Require submittal of erosion & sediment control plans for projects that are on 1 acre and larger sites.
- Develop a review checklist for plan review personnel.
- Provide the review checklist to contractors/developers so they know what is expected.
- Provide inspectors with a copy of the approved plans.

LIMITATIONS:

- Must be enforced to be affective.
- Sometimes site conditions are different then planned on and the plans have to be modified.
- The erosion control measures have to be maintained.
- The BMPs have to be installed early on in the project.
- The BMPs have to be removed at the end of the project.

TARGETED POLLUTANTS

- ■ Sediment
- ☒ Nutrients
- ☐ Heavy Metals
- ☐ Toxic Materials
- ☐ Oxygen Demanding Substances
- ☐ Oil & Grease
- ☐ Floatable Materials
- ☐ Bacteria & Viruses

■ High Impact
☒ Medium Impact
☐ Low or Unknown Impact

IMPLEMENTATION REQUIREMENTS

- ☒ Capital Costs
- ☐ O&M Costs
- ☐ Maintenance
- ☒ Training

■ High ☒ Medium ☐ Low

BMP: Establish/Compile Design Standards

ECDS

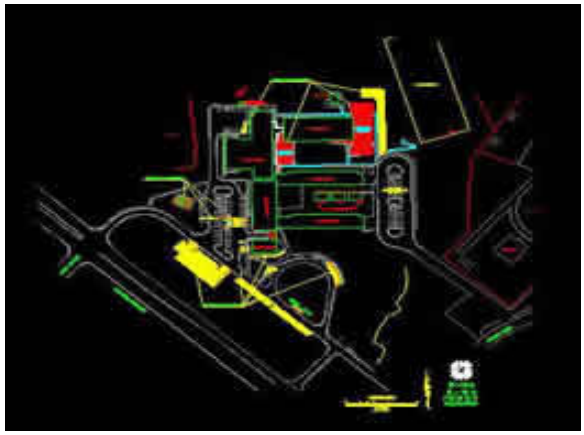

APPLICATIONS

- ☐ Manufacturing
- ☐ Material Handling
- ☐ Vehicle Maintenance
- ☒ Construction
- ☐ Commercial Activities
- ☐ Roadways
- ☐ Waste Containment
- ☐ Housekeeping Practices

DESCRIPTION:

Drawings of cities standards that depict specifications for building, construction practices etc. are helpful in communicating to contractors what their responsibilities are. Furthermore Standard drawings show inspectors what is proper practice and provides a minimum requirement to enforce. This also includes compilation of storm water related drawings with other city standard drawings. Drawings may sold to contractors so they can abide by city specs when working inside the city boundary.

APPROACH:

- Decide on specifications that reduce water pollutants in a given city.
- Make drawings depicting proper construction practices and acceptable designs
- Compile storm water related drawings into a specification booklet for contractors.
- Require that the design standards be met.
- Train inspectors on what to look for and how to enforce the standards.
- City requirements for an erosion control plan prior to breaking ground on a large development, can have great benefits.

LIMITATIONS:

- Some time may be required to decide on standards.
- Drawings will do no good without proper inspection and enforcement

MAINTENANCE:

- Specification Drawings may need to change as demands changes

TARGETED POLLUTANTS

- ■ Sediment
- ■ Nutrients
- ☒ Heavy Metals
- ■ Toxic Materials
- ☐ Oxygen Demanding Substances
- ☒ Oil & Grease
- ■ Floatable Materials
- ☐ Bacteria & Viruses

- ■ High Impact
- ☒ Medium Impact
- ☐ Low or Unknown Impact

IMPLEMENTATION REQUIREMENTS

- ■ Capital Costs
- ☐ O&M Costs
- ☐ Maintenance
- ☐ Training

■ High ☒ Medium ☐ Low

BMP: Grassed Swales

GS

Grassed swales can be used along roadsides and parking lots to collect and treat storm water runoff

APPLICATIONS

- ☐ Manufacturing
- ☐ Material Handling
- ☐ Vehicle Maintenance
- ☒ Construction
- ☒ Commercial Activities
- ☐ Roadways
- ☐ Waste Containment
- ☐ Housekeeping Practices

DESCRIPTION:

A series of vegetated, open channel management practices designed specifically to treat and attenuate storm water runoff for a specified water quality volume. Storm water is treated through filtering by the vegetation in the channel, filtering through a subsoil matrix, and/or infiltration into the underlying soils.

APPROACH:

- Grassed swales can be applied in most situations with some restrictions. Swales are very well suited for treating highway or residential road runoff because they are linear practices.
- Grassed channels are a good treatment option within watersheds that drain to cold water streams. These practices do not pond water for a long period of time and often induce infiltration. As a result, standing water will not typically be subjected to warming by the sun in these practices.
- Grassed swales should be used on sites with relatively flat slopes of less than 4 percent slope; 1 to 2 percent slope is recommended.
- A small fore-bay should be used at the front of the swale to trap incoming sediments. A pea gravel diaphragm, a small trench filled with river run gravel, should be used as pretreatment for runoff entering the sides of the swale.
- Swales should also have the capacity to pass larger storms (typically a 10-year storm) safely.

LIMITATIONS:

- Grassed swales cannot treat a very large drainage area.
- Wet swales may become a nuisance due to mosquito breeding.

MAINTENANCE:

- Maintenance of grassed swales mostly involves maintenance of the grass or wetland plant cover.

SALT LAKE COUNTY

TARGETED POLLUTANTS

- ■ Sediment
- ■ Nutrients
- ☐ Heavy Metals
- ■ Toxic Materials
- ■ Oxygen Demanding Substances
- ☐ Oil & Grease
- ☒ Floatable Materials
- ☐ Bacteria & Viruses

- ■ High Impact
- ☒ Medium Impact
- ☐ Low or Unknown Impact

IMPLEMENTATION REQUIREMENTS

- ☒ Capital Costs
- ☐ O&M Costs
- ☐ Maintenance
- ☐ Training

■ High ☒ Medium ☐ Low

BMP: Infrastructure Planning

IPL

Developers can design streets and pedestrian paths to maximize convenience and safety while at the same time minimizing impervious surface area (Source: The Rouse Company, no date)

APPLICATIONS

- ☐ Manufacturing
- ☐ Material Handling
- ☐ Vehicle Maintenance
- ☒ Construction
- ☒ Commercial Activities
- ☒ Roadways
- ☐ Waste Containment
- ☐ Housekeeping Practices

DESCRIPTION:

This practice requires changes in the regional growth planning process to contain sprawl development. Sprawl development is the expansion of low-density development into previously undeveloped land. The American Farmland Trust has estimated that the United States is losing about 50 acres an hour to suburban and exurban development (Longman, 1998). This sprawl development requires local governments to extend public services to new residential communities whose tax payments often do not cover the cost of providing those services. For example, in Prince William County, Virginia, officials have estimated that the costs of providing services to new residential homes exceeds what is brought in from taxes and other fees by $1,600 per home (Shear and Casey, 1996).

Infrastructure planning makes wise decisions to locate public services—water, sewer, roads, schools, and emergency services—in the suburban fringe and direct new growth into previously developed areas, discouraging

Low-density development. Generally, this is done by drawing a boundary or envelope around a community, beyond which major public infrastructure investments are discouraged or not subsidized. Meanwhile, economic and other incentives are provided within the boundary to encourage growth in existing neighborhoods.

APPROACH:

- Sprawl development negatively impacts water quality in several ways. The most significant impact comes from the increase in impervious cover that is associated with sprawl growth. In addition to rooftop impervious area from new development, extension of road systems and additions of paved surface from driveways create an overall increase in imperviousness.
- *Urban Growth Boundaries*. This planning tool establishes a dividing line that defines where a growth limit is to occur and where agricultural or rural land is to be preserved. Often, an urban services area is included in this boundary that creates a zone where public services will not be extended.
- *Infill/Community Redevelopment*. This practice encourages new development in unused or underutilized land in existing urban areas. Communities may offer tax breaks or other economic incentives to developers to promote the redevelopment of properties that are vacant or damaged.

LIMITATIONS:

- Intense development of existing areas can create a new set of challenges for storm water program managers. Storm water management solutions are often more difficult and complex in ultra-urban areas than in suburban areas
- Infrastructure planning is often done on a regional scale and requires a cooperative effort between all the communities within a given region in order to be successful.

TARGETED POLLUTANTS

- ☒ Sediment
- ☐ Nutrients
- ☐ Heavy Metals
- ☐ Toxic Materials
- ☐ Oxygen Demanding Substances
- ☐ Oil & Grease
- ☐ Floatable Materials
- ☐ Bacteria & Viruses

■ High Impact
☒ Medium Impact
☐ Low or Unknown Impact

IMPLEMENTATION REQUIREMENTS

- ☒ Capital Costs
- ☒ O&M Costs
- ☒ Maintenance
- ☐ Training

■ High ☒ Medium ☐ Low

BMP: Infiltration

IN

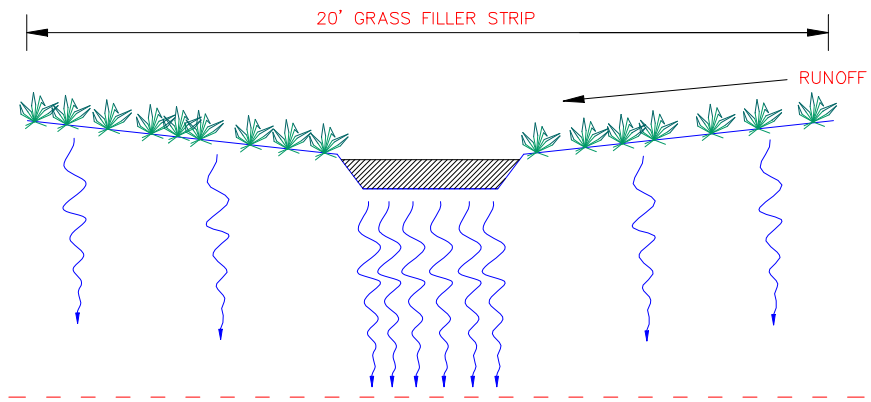

DESCRIPTION:

A family of systems in which the majority of the runoff from small storms is infiltrated into the ground rather than discharged to a surface water body. Infiltration systems include: ponds, vaults, trenches, dry wells, porous pavement, and concrete grids.

APPLICATION:

Suitable site soils and geologic conditions; low potential for long-term erosion in the watershed.

INSTALLATION/APPLICATION CRITERIA:

< Volume sized to capture a particular fraction of annual runoff.
< Pretreatment is necessary in fine soils.
< Emergency overflow or bypass for larger storms is needed.
< Observation wells are required in trenches.
< Infiltration surface must be protected during construction.
< Pond sides need vegetation to prevent erosion.
< During construction frequent inspection for clogging is necessary.
< Line sides of trench with permeable filter fabric
< Trench should be filled with clean washed stone or gravel. (1.5-3.0 in.)
< A six inch sand filter layer; cloth lines the bottom of trench.

LIMITATIONS:

< Loss of infiltrative capacity and high maintenance cost in fine soils.
< Low removal of dissolved pollutants in very coarse soils.
< Not suitable on fill sites or steep slopes.
< The risk of ground water contamination in very coarse soils, may require ground water monitoring.

MAINTENANCE:

< Remove sediment at a frequency appropriate to avoid excessive concentrations of pollutants and loss of infiltrative capacity.
< Frequent cleaning of porous pavements is required.
< Maintenance is difficult and costly for underground trenches.

CONSIDERATIONS

: Soils
: Area Required
: Slope
9 Water Availability
9 Aesthetics
9 Hydraulic Head
: Environmental Side Effects

SALT LAKE COUNTY

TARGETED POLLUTANTS

- Sediment
: Nutrients
- Heavy Metals
- Toxic Materials
- Oxygen Demanding Substances
- Oil & Grease
: Floatable Materials
- Bacteria & Viruses

■ High Impact
☒ Medium Impact
☐ Low or Unknown Impact

IMPLEMENTATION REQUIREMENTS

- Capital Costs
: O&M Costs
: Maintenance
9 Training

■ High ☒ Medium ☐ Low

BMP:Inlet Protection - Concrete Block

IP

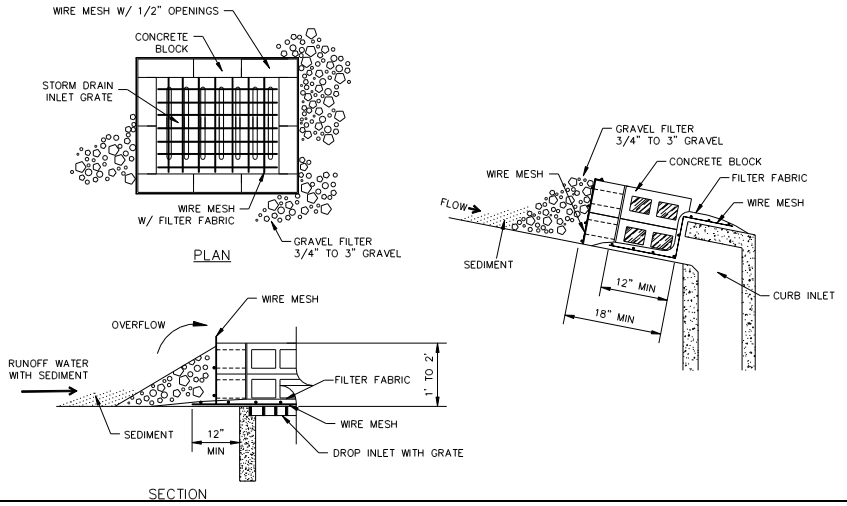

OBJECTIVES

- ☐ Housekeeping Practices
- ☐ Contain Waste
- ☐ Minimize Disturbed Areas
- ☐ Stabilize Disturbed Areas
- ☐ Protect Slopes/Channels
- ☒ Control Site Perimeter
- ☒ Control Internal Erosion

DESCRIPTION:

Concrete block and gravel filter placed over inlet to storm drain system.

APPLICATION:

Construct at inlets in paved or unpaved areas where upgradient area is to be disturbed by construction activities.

INSTALLATION/APPLICATION CRITERIA:

- Place wire mesh (with ½ inch openings) over the inlet grate extending one foot past the grate in all directions.
- Place concrete blocks around the inlet with openings facing outward. Stack blocks to minimum height of 12-inches and maximum height of 24-inches.
- Place wire mesh around outside of blocks.
- Place gravel (3/4" to 3") around blocks.

LIMITATIONS:

- Recommended for maximum drainage area of one acre.
- Excess flows may bypass the inlet requiring down gradient controls.
- Ponding will occur at inlet.

MAINTENANCE:

- Inspect inlet protection after every large storm event and at a minimum of once monthly.
- Remove sediment accumulated when it reaches 4-inches in depth.
- Replace filter fabric and clean or replace gravel if clogging is apparent.

SALT LAKE COUNTY

TARGETED POLLUTANTS

- ■ Sediment
- ☐ Nutrients
- ☐ Toxic Materials
- ☐ Oil & Grease
- ■ Floatable Materials
- ☐ Other Waste

- ■ High Impact
- ☒ Medium Impact
- ☐ Low or Unknown Impact

IMPLEMENTATION REQUIREMENTS

- ☒ Capital Costs
- ☐ O&M Costs
- ☒ Maintenance
- ☐ Training

■ High ☒ Medium ☐ Low

BMP: BMP Inspection and Maintenance

IM

Regular inspection and maintenance of storm water best Management practices is important to ensure that the Practices are functioning properly and to remove trash and organic debris

Applications

☒ Manufacturing
☒ Material Handling
☐ Vehicle Maintenance
☒ Construction
☒ Commercial Activities
☐ Roadways
☒ Waste Containment
☒ Housekeeping Practices

Description:

To maintain the effectiveness of postconstruction storm water control best management practices (BMPs), regular inspection of control measures is essential. Inspection and maintenance can be categorized into two groups – expected routine maintenance and nonroutine (repair) maintenance.

Approach:

- Curbing can be used at all industrial facilities. It is particularly useful in areas where liquid materials are transferred and as a stormwater runoff control.
- As with diking, common materials for curbing include earth, concrete, synthetic materials, metal, or other impenetrable materials. Asphalt is also a common material used in curbing. For maximum efficiency, spilled materials should be removed immediately, to allow space for future spills.
- Curbs should have pumping systems, instead of drainage systems, for collecting spilled materials.
- Curb systems should be maintained through curb repair (patching and replacement).
- To minimize the amount of spilled materials tracked outside of the area by personnel, grade within the curbing to direct the spilled mated materials to a down-slope side of the curbing, thus keeping the spilled materials away from personnel and equipment. Grading will also facilitate clean-up.

Limitations:

- Curbing is not effective for holding
- May require more maintenance than diking

Maintenance:

- Inspection should be conducted before and after storm events.
- When certain spills occur, cleanup should start immediately, thus preventing overflows and contamination of stormwater runoff.
- Inspection should also be made to clear clogging debris, prevent dilution by rainwater, and to again prevent overflow of any material.

SALT LAKE COUNTY

Targeted Pollutants

☒ Sediment
☐ Nutrients
☒ Heavy Metals
■ Toxic Materials
☐ Oxygen Demanding Substances
☒ Oil & Grease
☒ Floatable Materials
☐ Bacteria & Viruses

■ High Impact
☒ Medium Impact
☐ Low or Unknown Impact

Implementation Requirements

☒ Capital Costs
☒ O&M Costs
☒ Maintenance
☐ Training

BMP: Land Use Planning/Management

LUPM

DESCRIPTION:

This BMP represents an important opportunity to reduce pollutants in stormwater runoff by using a comprehensive planning process to integrate water quality concerns into the development and redevelopment process. It is applicable to all types of land use and represents one of the most effective pollution prevention practices.

APPROACH:

The land use planning process need not be complex. A basic schematic model involves:

< Phase I - Goals: Determine clear-cut water quality goals.
< Phase 2 - Study: Identify planning area, gather pertinent data, and write a description of the planning area and its associated problems.
< Phase 3 - Analysis and Synthesis: Determine and prioritize the water quality needs as they relate to land use.
< Phase 4 - Recommendations: Future courses of action are developed to address the identified problems and needs determined previously.
< Phase 5 - Adoption: The recommendations are presented to a political body for acceptance and implementation.
< Phase 6 - Implementation: Recommendations adopted by the political body are implemented by the locality.

LIMITATIONS:

< Land use planning/management frequently addresses sensitive public issues. Restrictions on certain land uses for the purpose of mitigating stormwater pollution may be politically unacceptable.
< The use of land use controls and planning for water quality improvements may be limited by the lack of staff to enforce various aspects of local zoning and building codes.
< The planning process addresses many public needs and legal requirements which often are in conflict with one another. It is difficult but extremely important to integrate and balance these sometimes competing programs.

PROGRAM ELEMENTS

: New Development
9 Residential
9 Commercial Activities
9 Industrial Activities
9 Municipal Facilities
9 Illegal Discharges

SALT LAKE COUNTY

TARGETED POLLUTANTS

Sediment
: Nutrients
Heavy Metals
Toxic Materials
9 Oxygen Demanding Substances
9 Oil & Grease
: Floatable Materials
9 Bacteria & Viruses

■ High Impact
☒ Medium Impact
☐ Low or Unknown Impact

IMPLEMENTATION REQUIREMENTS

9 Capital Costs
9 O&M Costs
Regulatory
9 Training
: Staffing
9 Administrative

■ High ☒ Medium ☐ Low

BMP: Map Storm Water Drains

MSWD

OBJECTIVES

☒ Housekeeping Practices
☐ Contain Waste
☐ Minimize Disturbed Areas
☐ Stabilize Disturbed Areas
☐ Protect Slopes/Channels
☐ Control Site Perimeter
☐ Control Internal Erosion

DESCRIPTION:
Create maps of existing storm water drain systems to facilitate spill cleanup and identify illicit connections.

APPLICATION:
- Use the map of the storm water drain system to track drainage paths and trace any contaminant problems to their source.
- In the event of a major spill, use the map of the storm water drain system to identify where the contaminants will flow to and cut off the flow before further contamination.

INSTALLATION/APPLICATION CRITERIA:
- Using GIS or other mapping programs, create accurate maps of the storm water drain system, including street names and pipe diameters.

LIMITATIONS:

MAINTENANCE:
- Annually review any development that has occurred and update the map of the storm drain system accordingly.

TARGETED POLLUTANTS

☐ Sediment
☐ Nutrients
■ Toxic Materials
☐ Oil & Grease
☐ Floatable Materials
■ Other Waste

■ High Impact
☒ Medium Impact
☐ Low or Unknown Impact

IMPLEMENTATION REQUIREMENTS

☒ Capital Costs
☐ O&M Costs
☒ Maintenance
☐ Training

■ High ☒ Medium ☐ Low

BMP: Ordinance Development

OD

Applications

☒ Manufacturing
☒ Material Handling
☒ Vehicle Maintenance
☒ Construction
☒ Commercial Activities
☒ Roadways
☒ Waste Containment
☒ Housekeeping Practices

Description:

Existing ordinances relating to storm water are reviewed for compliance. New ordinances are written to prohibit non-storm water discharges into the Municipal Separate Storm Sewer System (MS4), require proper erosion and sediment controls on construction sites, and require the implementation of post-construction runoff controls.

Approach:

- Review existing storm drain ordinances for consistency and compliance with state regulations and make improvements, if necessary. Ensure that no conflicts will occur with new ordinances that will be written and adopted.
- Write and adopt an ordinance that prohibits (to the extent allowable under State, Tribal, or local law) the discharge of non-storm water discharges into the MS4 with appropriate enforcement procedures and actions.
- Write and adopt an ordinance, with sanctions to ensure compliance, requiring the implementation of proper erosion and sediment controls, and controls for other wastes, on applicable construction sites.
- Write and adopt an ordinance requiring the implementation of post-construction runoff controls to the extent allowable under State, Tribal, or local law.
- Educate the public about the new ordinances.
- Enforce the new ordinances.

Limitations:

- Wording of ordinances is often difficult. It should be specific to serve the intended purpose, but not too specific to cause potential conflicts with other ordinances or situations.
- Once an ordinance is adopted, it can be difficult to modify ordinances to meet changing needs.
- Ordinances have to be enforced to be beneficial.
- Ordinances take time to change.

SALT LAKE COUNTY

Targeted Pollutants

☒ Sediment
☒ Nutrients
☒ Heavy Metals
☒ Toxic Materials
☒ Oxygen Demanding Substances
☒ Oil & Grease
☒ Floatable Materials
☒ Bacteria & Viruses

■ High Impact
☒ Medium Impact
☐ Low or Unknown Impact

Implementation Requirements

■ Capital Costs
■ O&M Costs
☐ Maintenance
☐ Training

■ High ☒ Medium ☐ Low

BMP: Portable Toilets

PT

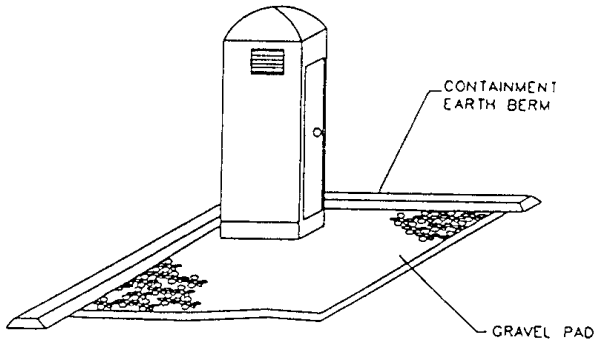

1'x1'

OBJECTIVES

- ☒ Housekeeping Practices
- ☒ Contain Waste
- ☐ Minimize Disturbed Areas
- ☐ Stabilize Disturbed Areas
- ☐ Protect Slopes/Channels
- ☐ Control Site Perimeter
- ☐ Control Internal Erosion

DESCRIPTION:
Temporary on-site sanitary facilities for construction personnel.

APPLICATION:
All sites with no permanent sanitary facilities or where permanent facility is too far from activities.

INSTALLATION/APPLICATION CRITERIA:
- Locate portable toilets in convenient locations throughout the site.
- Prepare level, gravel surface and provide clear access to the toilets for servicing and for on-site personnel.
- Construct earth berm perimeter (See Earth Berm Barrier Information Sheet), control for spill/protection leak.

LIMITATIONS:
No limitations.

MAINTENANCE:
- Portable toilets should be maintained in good working order by licensed service with daily observation for leak detection.
- Regular waste collection should be arranged with licensed service.
- All waste should be deposited in sanitary sewer system for treatment with appropriate agency approval.

TARGETED POLLUTANTS

- ☐ Sediment
- ☐ Nutrients
- ☐ Toxic Materials
- ☐ Oil & Grease
- ☐ Floatable Materials
- ■ Other Waste

■ High Impact
☒ Medium Impact
☐ Low or Unknown Impact

IMPLEMENTATION REQUIREMENTS

- ☒ Capital Costs
- ☒ O&M Costs
- ☒ Maintenance
- ☐ Training

■ High	☒ Medium	☐ Low

BMP: Riprap

RR

CONSIDERATIONS

☒ Soils
☒ Area Required
☒ Slope
☐ Water Availability
☒ Aesthetics
☐ Hydraulic Head
☒ Environmental Side Effects

DESCRIPTION:
Riprap is a permanent, erosion-resistant protective layer made of loose stones. It is intended to protect soil from erosion in areas of concentrated runoff. Riprap may also be used to stabilize slopes that are unstable because of seepage problems.

APPLICATION:
- Riprap is normally used at locations where erosive forces from water flow exceed the ability of the soil or vegetative cover to resist those forces.
- Riprap can be used for pipe outlet protection, channel lining, scour protection, etc.
- Riprap is commonly used for wave protection on lakes.

INSTALLATION/APPLICATION CRITERIA:
- For slopes steeper than 2:1, consider using materials other than riprap for erosion protection.
- If riprap is being planned for the bottom of a permanently flowing channel, the bottom can be modified to enhance fish habitat. This can be done by constructing riffles and pools which simulate natural conditions.
- When working within flowing streams, measures should be taken to prevent excessive turbidity and erosion during construction. Bypassing base flows or temporarily blocking base flows are two possible methods. Work should be done during a period of low flow.

In designing riprap consider the following:
- Use durable rock, such as granite, and a variety of rock sizes.
- The thickness of riprap layers should be at least 1.25 times the max. stone diameter.
- Filter material is usually required between riprap and the underlying soil surface.

LIMITATIONS:
- Riprap may be unstable on very steep slopes.
- The placement of a riprap in streams requires a state stream alteration permit.

MAINTENANCE:
- Riprap should be inspected annually and after major storms.
- If riprap has been damaged, repairs should be made promptly to prevent a progressive failure.
- If repairs are needed repeatedly at one location, the site should be evaluated to see if original design conditions have changed.

TARGETED POLLUTANTS

☒ Sediment
☐ Nutrients
☐ Heavy Metals
☐ Toxic Materials
☐ Oxygen Demanding Substances
☐ Oil & Grease
☐ Floatable Materials
☐ Bacteria & Viruses

■ High Impact
☒ Medium Impact
☐ Low or Unknown Impact

IMPLEMENTATION REQUIREMENTS

☒ Capital Costs
☒ O&M Costs
☒ Maintenance
☐ Training

■ High ☒ Medium ☐ Low

BMP: Rock Check Dams

CD

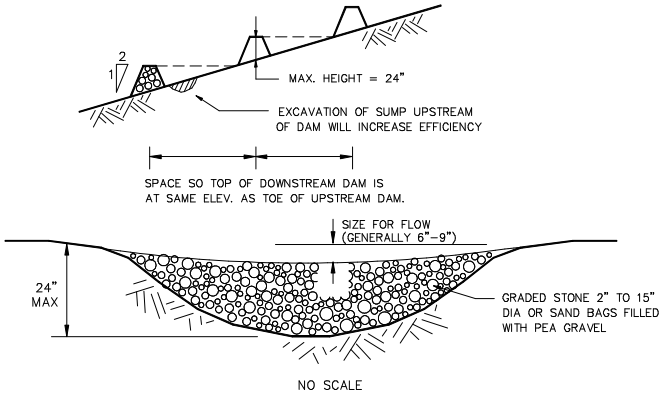

OBJECTIVES

- ☐ Housekeeping Practices
- ☐ Contain Waste
- ☐ Minimize Disturbed Areas
- ☒ Stabilize Disturbed Areas
- ☒ Protect Slopes/Channels
- ☐ Control Site Perimeter
- ☐ Control Internal Erosion

DESCRIPTION:

A small, temporary dam constructed across a drainage ditch to reduce velocity of concentrated storm water flows, thereby reducing the erosion of the ditch.

APPLICATION:

- Temporary drainage paths
- Permanent drainage ways not yet stabilized
- Existing drainage paths receiving increased flows due to construction

INSTALLATION/APPLICATION CRITERIA:

- Prepare location of dam by removing any debris and rough grading any irregularities in channel bottom
- Place rocks by hand or with appropriate machinery, do not dump
- Construct dam with center lower to pass design flow
- Construct 50% side slopes on dam

LIMITATIONS:

- Maximum recommended drainage area is 10 acres
- Maximum recommended height is 24"
- Do not use in running stream

MAINTENANCE:

- Inspect dams daily during prolonged rainfall, after each major rain event and at a minimum of once monthly.
- Remove any large debris and repair any damage to dam, channel or sideslopes
- Remove accumulated sediment when it reaches one half the height of the dam

TARGETED POLLUTANTS

- ■ Sediment
- ☐ Nutrients
- ☐ Toxic Materials
- ☐ Oil & Grease
- ☐ Floatable Materials
- ☐ Other Waste

- ■ High Impact
- ☒ Medium Impact
- ☐ Low or Unknown Impact

IMPLEMENTATION REQUIREMENTS

- ☒ Capital Costs
- ☐ O&M Costs
- ☒ Maintenance
- ☐ Training

■ High ☒ Medium ☐ Low

BMP: Seeding and Planting

SP

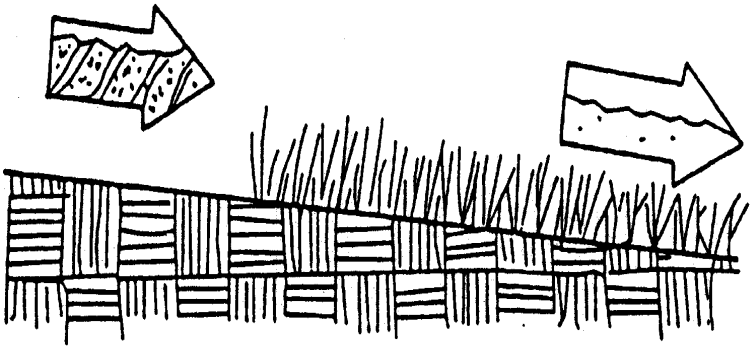

OBJECTIVES

- ☐ Housekeeping Practices
- ☐ Contain Waste
- ☐ Minimize Disturbed Areas
- ☒ Stabilize Disturbed Areas
- ☒ Protect Slopes/Channels
- ☐ Control Site Perimeter
- ☐ Control Internal Erosion

DESCRIPTION:

Seeding of grass and plantings of trees, shrubs, vines and ground covers provide long-term stabilization of soil. In some areas, with suitable climates, grasses can be planted for temporary stabilization.

APPLICATION:

- Appropriate for site stabilization both during construction and post-construction.
- Any graded/cleared areas where construction activities have ceased.
- Open space cut and fill areas.
- Steep slopes, spoil piles, vegetated swales, landscape corridors, stream banks.

INSTALLATION/APPLICATION CRITERIA:

Type of vegetation, site and seedbed preparation, planting time, fertilization and water requirements should be considered for each application.

Grasses:

- Ground preparation: fertilize and mechanically stabilize the soil.
- Tolerant of short-term temperature extremes and waterlogged soil composition.
- Appropriate soil conditions: shallow soil base, good drainage, slope 2:1 or flatter.
- Mowing, irrigating, and fertilizing are vital for promoting vigorous grass growth.

Trees and Shrubs:

- Selection criteria: vigor, species, size, shape & wildlife food source.
- Soil conditions: select species appropriate for soil, drainage & acidity.
- Other factors: wind/exposure, temperature extremes, and irrigation needs.

Vines and Ground Covers:

- Ground preparation: lime and fertilizer preparation.
- Use proper seeding rates.
- Appropriate soil conditions: drainage, acidity and slopes.
- Generally avoid species requiring irrigation.

LIMITATIONS:

- Permanent and temporary vegetation may not be appropriate in dry periods without irrigation.
- Fertilizer requirements may have potential to create stormwater pollution.

MAINTENANCE:

- Shrubs and trees must be adequately watered and fertilized and if needed pruned.
- Grasses may need to be watered and mowed.

TARGETED POLLUTANTS

- ■ Sediment
- ☒ Nutrients
- ☒ Toxic Materials
- ☐ Oil & Grease
- ☐ Floatable Materials
- ☐ Other Waste

- ■ High Impact
- ☒ Medium Impact
- ☐ Low or Unknown Impact

IMPLEMENTATION REQUIREMENTS

- ☒ Capital Costs
- ☒ O&M Costs
- ☒ Maintenance
- ☐ Training

■ High ☒ Medium ☐ Low

BMP: Silt Fence

SF

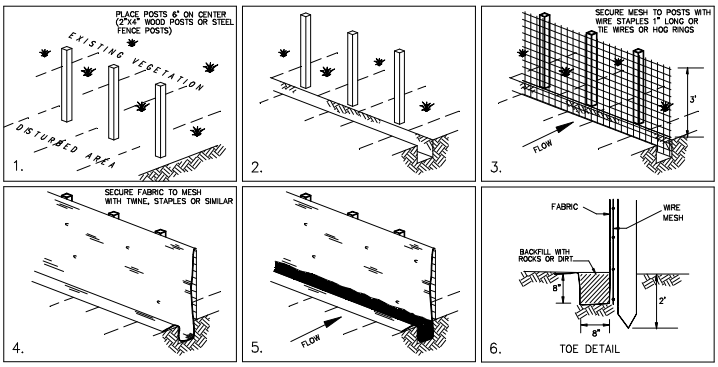

OBJECTIVES

- ☐ Housekeeping Practices
- ☐ Contain Waste
- ☐ Minimize Disturbed Areas
- ☐ Stabilize Disturbed Areas
- ☒ Protect Slopes/Channels
- ☒ Control Site Perimeter
- ☒ Control Internal Erosion

DESCRIPTION:

A temporary sediment barrier consisting of entrenched filter fabric stretched across and secured to supporting posts.

APPLICATION:

- Perimeter control: place barrier at downgradient limits of disturbance
- Sediment barrier: place barrier at toe of slope or soil stockpile
- Protection of existing waterways: place barrier at top of stream bank
- Inlet protection: place fence surrounding catchbasins

INSTALLATION/APPLICATION CRITERIA:

- Place posts 6 feet apart on center along contour (or use preassembled unit) and drive 2 feet minimum into ground. Excavate an anchor trench immediately upgradient of posts.
- Secure wire mesh (14 gage min. With 6 inch openings) to upslope side of posts. Attach with heavy duty 1 inch long wire staples, tie wires or hog rings.
- Cut fabric to required width, unroll along length of barrier and drape over barrier. Secure fabric to mesh with twine, staples, or similar, with trailing edge extending into anchor trench.
- Backfill trench over filter fabric to anchor.

LIMITATIONS:

- Recommended maximum drainage area of 0.5 acre per 100 feet of fence
- Recommended maximum upgradient slope length of 150 feet
- Recommended maximum uphill grade of 2:1 (50%)
- Recommended maximum flow rate of 0.5 cfs
- Ponding should not be allowed behind fence

MAINTENANCE:

- Inspect immediately after any rainfall and at least daily during prolonged rainfall.
- Look for runoff bypassing ends of barriers or undercutting barriers.
- Repair or replace damaged areas of the barrier and remove accumulated sediment.
- Reanchor fence as necessary to prevent shortcutting.
- Remove accumulated sediment when it reaches ½ the height of the fence.

TARGETED POLLUTANTS

- ■ Sediment
- ☐ Nutrients
- ☐ Toxic Materials
- ☐ Oil & Grease
- ☐ Floatable Materials
- ☐ Other Waste

■ High Impact
☒ Medium Impact
☐ Low or Unknown Impact

IMPLEMENTATION REQUIREMENTS

- ☒ Capital Costs
- ☒ O&M Costs
- ☒ Maintenance
- ☐ Training

■ High	☒ Medium	☐ Low

BMP: Stabilized Construction Entrance

SCE

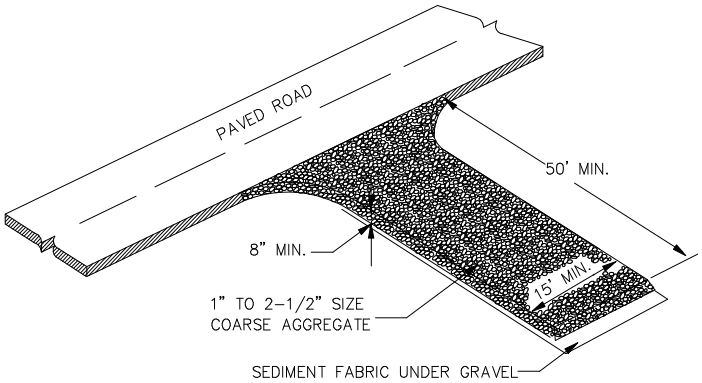

OBJECTIVES

- ☒ Housekeeping Practices
- ☐ Contain Waste
- ☐ Minimize Disturbed Areas
- ☐ Stabilize Disturbed Areas
- ☐ Protect Slopes/Channels
- ☒ Control Site Perimeter
- ☐ Control Internal Erosion

DESCRIPTION:
A stabilized pad of crushed stone located where construction traffic enters or leaves the site from or to paved surface.

APPLICATIONS:
At any point of ingress or egress at a construction site where adjacent traveled way is paved. Generally applies to sites over 2 acres unless special conditions exist.

INSTALLATION/APPLICATION CRITERIA:
- Clear and grub area and grade to provide maximum slope of 2%.
- Compact subgrade and place filter fabric if desired (recommended for entrances to remain for more than 3 months.
- Place coarse aggregate, 1 to 2-1/2 inches in size, to a minimum depth of 8 inches.

LIMITATIONS:
- Requires periodic top dressing with additional stones.
- Should be used in conjunction with street sweeping on adjacent public right-of-way.

MAINTENANCE:
- Inspect daily for loss of gravel or sediment buildup.
- Inspect adjacent roadway for sediment deposit and clean by sweeping or shoveling.
- Repair entrance and replace gravel as required to maintain control in good working condition.
- Expand stabilized area as required to accommodate traffic and prevent erosion at driveways.

TARGETED POLLUTANTS

- ■ Sediment
- ☐ Nutrients
- ☐ Toxic Materials
- ☐ Oil & Grease
- ☐ Floatable Materials
- ☐ Other Waste

■ High Impact
☒ Medium Impact
☐ Low or Unknown Impact

IMPLEMENTATION REQUIREMENTS

- ☒ Capital Costs
- ☒ O&M Costs
- ☒ Maintenance
- ☐ Training

■ High	☒ Medium	☐ Low

BMP: Straw Bale Barrier

STB

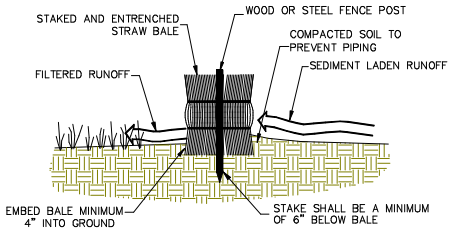

SECTION

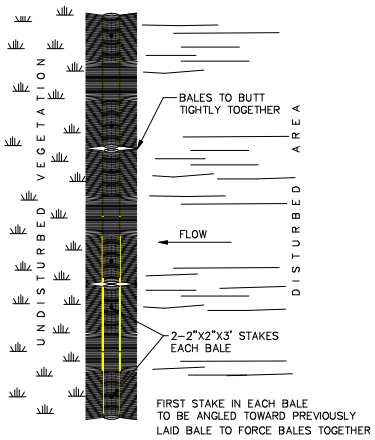

PLAN

OBJECTIVES

- ☐ Housekeeping Practices
- ☐ Contain Waste
- ☐ Minimize Disturbed Areas
- ☐ Stabilize Disturbed Areas
- ☒ Protect Slopes/Channels
- ☒ Control Site Perimeter
- ☒ Control Internal Erosion

DESCRIPTION:

Temporary sediment barrier consisting of a row of entrenched and anchored straw bales.

APPLICATION:

- Perimeter Control: place barrier at downgradient limits of disturbance.
- Sediment barrier: place barrier at toe of slope or soil stockpile.
- Protection of existing waterways: place barrier at top of stream bank.
- Inlet Protection.

INSTALLATION/APPLICATION CRITERIA:

- Excavate a 4-inch minimum deep trench along contour line, i.e. parallel to slope, removing all grass and other material that may allow underflow.
- Place bales in trench with ends tightly abutting, fill any gaps by wedging loose straw into openings.
- Anchor each bale with 2 stakes driven flush with the top of the bale.
- Backfill around bale and compact to prevent piping, backfill on uphill side to be built up 4-inches above ground at the barrier.

LIMITATIONS:

- Recommended maximum area of 0.5 acre per 100 feet of barrier
- Recommended maximum upgradient slope length of 150 feet
- Recommended maximum uphill grade of 2:1 (50%)

MAINTENANCE:

- Inspect immediately after any rainfall and at least daily during prolonged rainfall.
- Look for runoff bypassing ends of barriers or undercutting barriers.
- Repair or replace damaged areas of the barrier and remove accumulated sediment.
- Realign bales as necessary to provide continuous barrier and fill gaps.
- Recompact soil around barrier as necessary to prevent piping.

TARGETED POLLUTANTS

- ■ Sediment
- ☐ Nutrients
- ☐ Toxic Materials
- ☐ Oil & Grease
- ☐ Floatable Materials
- ☐ Other Waste

■ High Impact
☒ Medium Impact
☐ Low or Unknown Impact

IMPLEMENTATION REQUIREMENTS

- ☒ Capital Costs
- ☐ O&M Costs
- ☒ Maintenance
- ☐ Training

■ High	☒ Medium	☐ Low

BMP: Temporary Drains And Swales

TDS

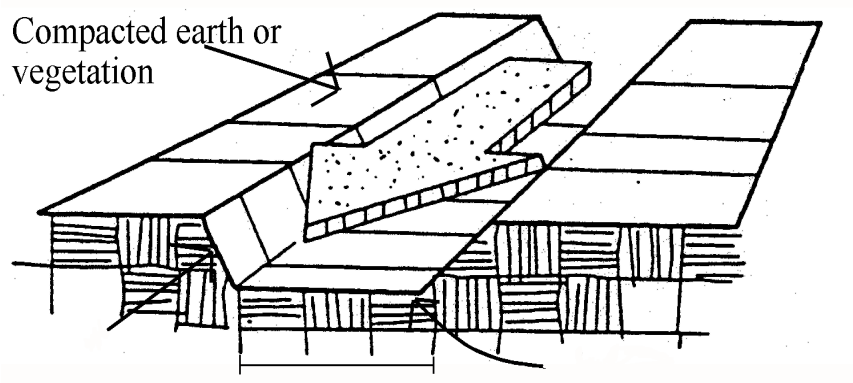

2 ft (min)
2:1 or flatter
Stabilization

OBJECTIVES

- ☐ Housekeeping Practices
- ☐ Contain Waste
- ☐ Minimize Disturbed Areas
- ☐ Stabilize Disturbed Areas
- ☒ Protect Slopes/Channels
- ☒ Control Site Perimeter
- ☒ Control Internal Erosion

DESCRIPTION:

Temporary drains and swales are used to divert off-site runoff around the construction site, divert runoff from stabilized areas around disturbed areas, and direct runoff into sediment.

APPLICATIONS:

- Temporary drains and swales are appropriate for diverting any upslope runoff around unstabilized or disturbed areas of the construction site.
- Prevent slope failures. Prevent damage to adjacent property. Prevents erosion and transport of sediments into water ways. Increases the potential for infiltration. Diverts sediment-laden runoff into sediment basins or traps.

INSTALLATION/APPLICATION:

- Temporary drainage swales will effectively convey runoff and avoid erosion if built properly:
- Size temporary drainage swales using local drainage design criteria. A permanent drainage channel must be designed by a professional engineer (see the local drainage design criteria for proper design).
- At a minimum, the drain/swale should conform to predevelopment drainage patterns and capacities.
- Construct the drain/swale with an uninterrupted, positive grade to a stabilized outlet. Provide erosion protection or energy dissipation measures if the flow out of the drain or swale can reach an erosive velocity.

LIMITATIONS:

- Temporary drains and swales or any other diversion of runoff should not adversely impact upstream or downstream properties.
- Temporary drains and swales must conform to local floodplain management requirements.

MAINTENANCE:

- Inspect weekly and after each rain.
- Repair any erosion immediately.
- Remove sediment which builds up in the swale and restricts its flow capacity.

TARGETED POLLUTANTS

- ■ Sediment
- ☐ Nutrients
- ☐ Toxic Materials
- ☐ Oil & Grease
- ☐ Floatable Materials
- ☐ Other Waste

- ■ High Impact
- ☒ Medium Impact
- ☐ Low or Unknown Impact

IMPLEMENTATION REQUIREMENTS

- ☒ Capital Costs
- ☐ O&M Costs
- ☐ Maintenance
- ☐ Training

■ High ☒ Medium ☐ Low

BMP: Zoning

ZO

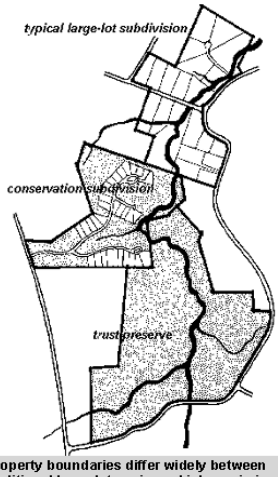

Property boundaries differ widely between traditional large-lot zoning, which maximizes the acreage of individual properties, and conservation zoning, which maximizes the amount of shared open space (Source: Arendt, 1996)

Applications

- ☐ Manufacturing
- ☐ Material Handling
- ☐ Vehicle Maintenance
- ☒ Construction
- ☒ Commercial Activities
- ☐ Roadways
- ☐ Waste Containment
- ☐ Housekeeping Practices

Description:

Zoning is a classification scheme for land use planning. Zoning can serve numerous functions and can help mitigate storm water runoff problems by facilitating better site designs. By correctly applying the right zoning technique, development can be targeted into specific areas, limiting development in other areas and providing protection for the most important land conservation areas.

Approach:

- Impervious Overlay Zoning: This type of overlay zoning limits future impervious areas.
- Incentive Zoning: This planning technique relies on bonuses or incentives for developers to encourage the creation of certain amenities or land use designs. A developer is granted the right to build more intensively on a property or given some other bonus in exchange for an amenity or a design that the community considers beneficial.
- Performance Zoning: Performance zoning is a flexible approach that has been employed in a variety of fashions in several different communities across the country. Some performance factors include traffic or noise generation limits, lighting requirements, storm water runoff quality and quantity criteria, protection of wildlife and vegetation, and even architectural style criteria
- Urban Growth Boundaries: Urban growth boundaries are sometimes called development service districts and include areas where public services are already provided (e.g., sewer, water, roads, police, fire, and schools).

Limitations:

- Some zoning techniques may be limited by economic and political acceptance and should be evaluated on these criteria as well as storm water management goals.

SALT LAKE COUNTY

Targeted Pollutants

- ☒ Sediment
- ☐ Nutrients
- ☐ Heavy Metals
- ☐ Toxic Materials
- ☐ Oxygen Demanding Substances
- ☐ Oil & Grease
- ☐ Floatable Materials
- ☐ Bacteria & Viruses

■ High Impact
☒ Medium Impact
☐ Low or Unknown Impact

Implementation Requirements

- ☒ Capital Costs
- ☒ O&M Costs
- ☒ Maintenance
- ☐ Training

■ High ☒ Medium ☐ Low